DWG NO.	SH	REV
088-00008	1 OF 1	C

REVISIONS

ZONE	REV.	DESCRIPTION	DATE	APPROVED
	-	INITIAL RELEASE	2011/03/17	
	A	ECN 27223 CHANGED TO MATCH 400-13760-0001 HEADER	2017/08/03	2017/08/07 KHT
	B	ECN 39150 Add additional notes to clarify dimensional aspects	2019/08/30	2019/08/03 KHT
	C	ADDED BOTTOM VIEW	6/8/2023	2023/06/27 WR

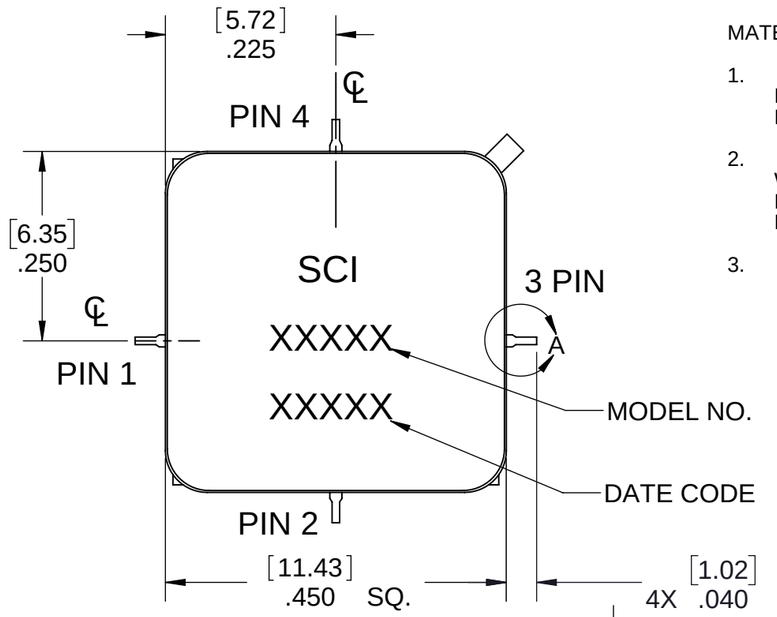

MATERIAL:

1. WALLS/BASE - CERAMIC/KOVAR
   LEADS - KOVAR
   LID - KOVAR
2. FINISH:
   WALLS - GOLD/NICKEL PLATING
   LEADS - GOLD/NICKEL PLATING
   LID - NICKEL PLATING
3. DIMENSIONS ARE INCHES (mm)

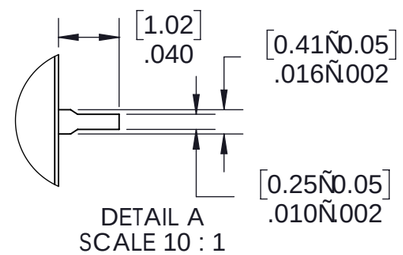

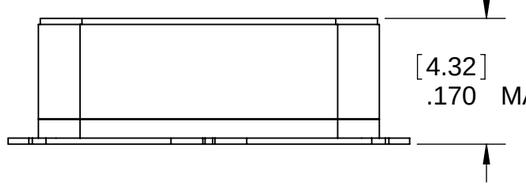

DIMENSION SHOWN DOES NOT INCLUDE SOLDER DIPPED SURFACES

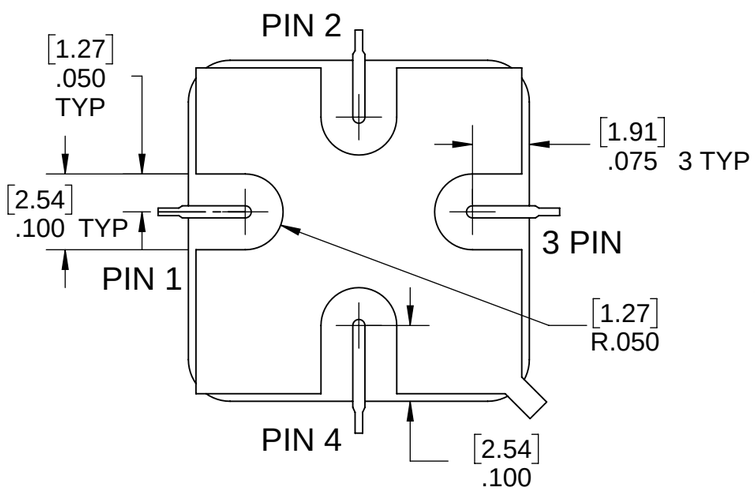

PIN 1 - INPUT FOR AMPLIFIERS AND DETECTORS/CONTROL FOR VCO'S
PIN 2 - GROUND FOR AMPLIFIERS/CONTROL FOR DETECTORS & ATTENUATORS
(SEE FOOTPRINTS FOR DETAILS)
PIN 3 - OUTPUT
PIN 4 - +DC

CAUTION

THIS ASSEMBLY CONTAINS PARTS SENSITIVE TO DAMAGE BY ELECTROSTATIC DISCHARGE (ESD). USE ESD PRECAUTIONARY PROCEDURES WHEN TOUCHING, REMOVING OR INSERTING

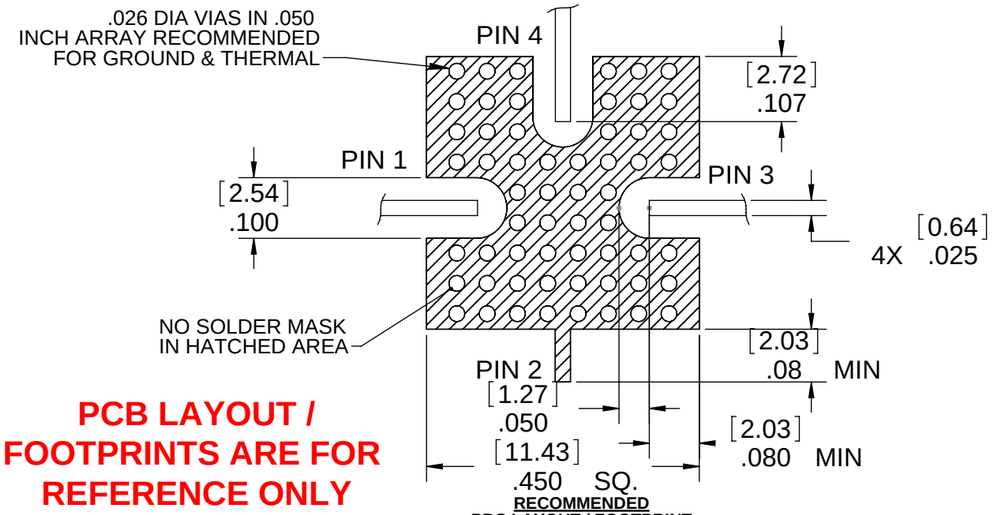

RECOMMENDED PBC LAYOUT / FOOTPRINT FOR SM3 AMPLIFIERS & VCO'S

PCB LAYOUT / FOOTPRINTS ARE FOR REFERENCE ONLY NOT TO BE USED FOR DIMENSIONAL PACKAGE FEATURES

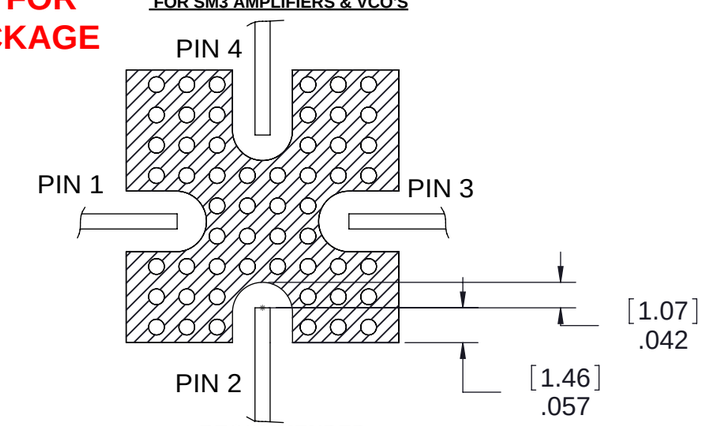

RECOMMENDED PCB LAYOUT / FOOTPRINT FOR SM3 DETECTORS & ATTENUATORS

PROPRIETARY & CONFIDENTIAL

Proprietary & Confidential - This document and the information disclosed within, including the document structure and contents, are confidential and the proprietary property of SPECTRUM CONTROL INC. and are protected by patent, copyright, and other proprietary rights. Any disclosure to a third party in whole or in part in any manner is expressly prohibited without the prior written permission of SPECTRUM CONTROL INC.

UNLESS OTHERWISE SPECIFIED

* INTERPRET DRAWING IAW ASME Y14.100-2004
* DIMENSIONING AND TOLERANCING IAW ASME Y14.5-1994
* PARENTHETICAL INFORMATION FOR REFERENCE ONLY
* DIMENSIONAL LIMITS APPLY BEFORE PROCESSES
* DIMENSIONS ARE IN INCHES
* TOLERANCES ARE: ANGLES Ñ1.0º 2 PLACE DECIMAL Ñ.02 3 PLACE DECIMAL Ñ.005
* SURFACE FINISH 63
* REMOVE ALL BURRS AND SHARP EDGES .010 RAD MAX.
* CONCENTRICITY MACHINED DIA: .002 FIM
* MACHINED TOOL MISMATCH: .002 MAX.

DO NOT SCALE DRAWING

3rd ANGLE PROJECTION

ANSI

DRAWN	WAR	2011-03-17
CHECKED		
ENGRG	VB	2011-03-17
MFG		
QA	KT	2011-03-17

SPECTRUM CONTROL

2707 Black Lake Place
Philadelphia, PA 19154-1008 (USA)

TITLE

OUTLINE SM3

SIZE	CAGE CODE	DWG NO.	REV
B	60979	088-00008	C

SCALE: DO NOT SCALE

SHEET 1 OF 1